Electrical and Electronics Measurements Laboratory Experiment Manual

Department of Electrical Engineering, IIT Roorkee

Experiment No. 7

Measurement of Low-magnitude AC Voltage using Precision Rectifier

Objective: To measure low-magnitude AC voltage using precision rectifier circuit and a DC voltmeter.

Apparatus Required:

- OP07 Operational Amplifier IC – 02 Nos.
- Breadboard and few connecting wires.
- 10 kΩ resistors (05 Nos)
- Digital Storage Oscilloscope.
- Dual Channel DC Regulated Power Supply.

Theory and Circuit Diagram:

For the measurement of low-magnitude AC voltages, the conventional rectifier-type instruments cannot be used. This is due to the fact that practical diodes have cut-in voltage of around 0.4 V to 0.7 V. To overcome this issue, opamp-based precision rectifiers can be used. Fig. 1 shows precision half-wave rectifier circuit realized using a single diode. The diode is connected in the negative feedback. During the positive half cycle of the input voltage (V_{in}), the diode conducts and hence the negative feedback ensures that $V_{OUT} = V_{in}$. It is to be noted that the high gain of opamp drastically

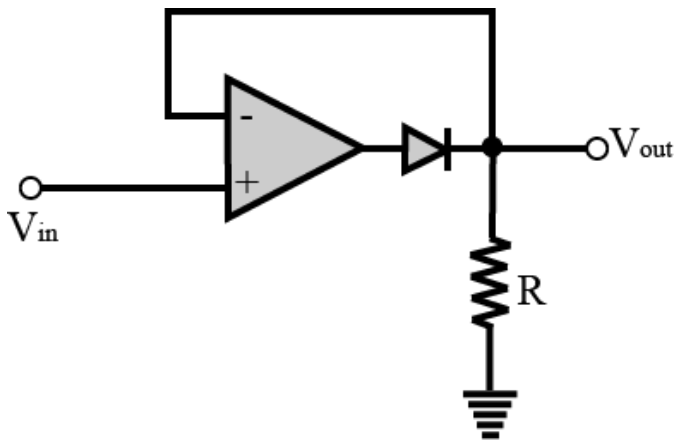

Fig. 1. Precision Half-Wave Rectifier Circuit Realized using a Single Practical Diode

reduces the net voltage drop across the diode. It is because of this feature, a signal with amplitude less than the cut-in voltage of the diode can be rectified. During the negative feedback, the diode is turned off and hence, no current flows through the load resistance R which makes $V_{OUT} = 0$ V.

Procedure:

1. Connect the circuit on the breadboard as shown in Fig. 1.
2. Obtain the AC voltage with magnitude less than 700 mV from the function generator and feed it to the circuit as V_{in}. If the signal contains any offset, then adjust the same. The frequency of the AC voltage may be chosen as 50 Hz, 500 Hz, 5 kHz.
3. Measure the RMS value of V_{in} using a true-RMS digital multimeter.
4. Observe the output voltage (V_{out}) using a DC voltmeter and estimate the RMS value of input signal using suitable conversion factor.

Observations: To be recorded in tabular form in following format:

Sr. No.	RMS value of V_{in} (in V)	Frequency	Average value of V_{out} (V)	Calculated RMS	% Error
1					
2					
3					
4					
5					
6					
7					
8					
9					
10					

Improved Precision Rectifier:

The circuit shown in Fig. 1 has an important drawback. During the negative half-cycle, the diode does not conduct and hence, feedback does not exist. The opamp works in open loop configuration and hence, its output goes into negative saturation. Therefore, opamp takes some finite time to follow the input during the next positive half cycle. At higher frequency of the input signal, this effect become prominent and results in the distortion of the output. To avoid the saturation of opamp output, an improved precision rectifier, as shown in Fig. 2 is implemented. In this case, during the positive half cycle of the input signal, the diode D_2 conducts and hence, the output voltage V_{out} becomes 0 V. On the other hand, D_1 conducts and the V_{out} can be expected as $V_{out} = -(R_2/R_1) \times V_{in}$.

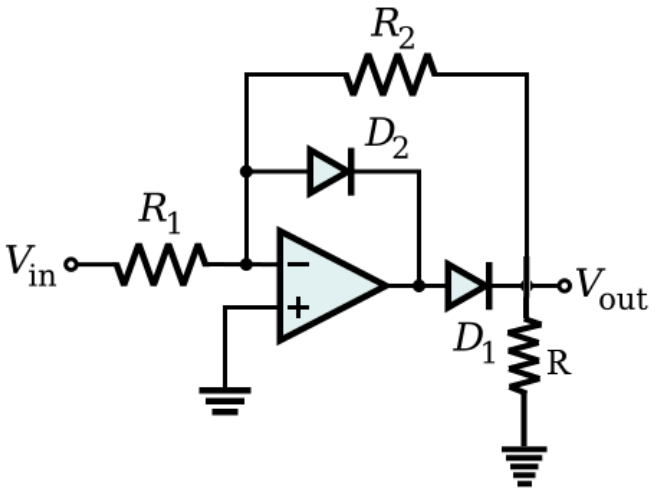

Fig. 2. Improved Precision Half-Wave Rectifier Circuit

Procedure and Observation Table: Same as that of previous case.

Discussion:

1. What are the practical applications of precision rectifier circuits.
2. Discuss briefly the effect of slew rate, bandwidth, limited open loop gain of the opamp on the final output.